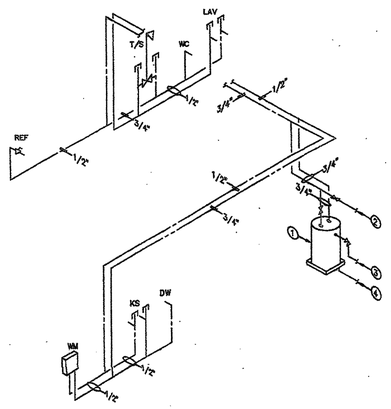

UNIT- 'A' WATER ISOMETRIC
NTS

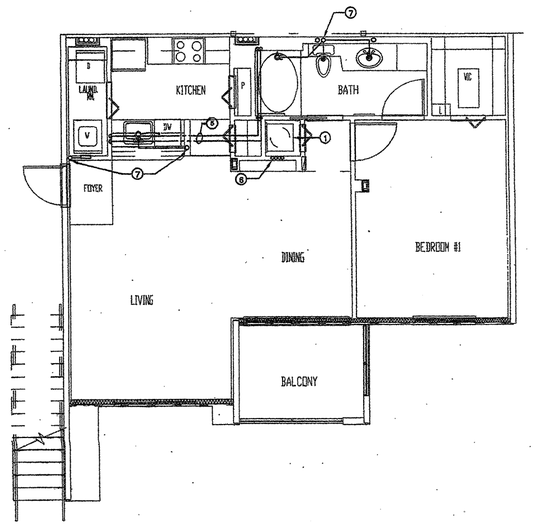

PLUMBING FLOOR PLAN UNIT- 'A'
828 SF
1/4" = 1'-0"

KEY NOTES:

1. 40 GALLON GLASS LINED ELECTRIC WATER HEATER, BELOW A/C UNIT, 240V, 4.5KW WITH DRAIN PAN & P&T VALVE.
2. 3/4" FROM WATER RISER.
3. 3/4" TO P&T RISER.
4. 1" TO DRAIN PAN RISER.
5. PIPING RUNS ABOVE DROPPED CEILING.
6. WATER, PRESSURE RELIEF, CONDENSATE AND DRAIN PAN RISERS.
7. SANITARY RISER REFER TO 3/32" DRAWING FOR STACK NUMBERS.

STOFFER & ASSOCIATES, INC.
CONSULTING ENGINEERS
12902 Brookshire Court
Randall D. Stoffer, P.E.
Phone (407) 351-0505
Orlando, Florida 32832
FE #07387
Fax (407) 345-1930
MECHANICAL - HVAC - PLUMBING

REVISIONS	BY

MARC VERDET A.I.A.
ARCHITECT/PLANNING
MARC A VERDET AR # 0 Wmbg
10 S.E. 4th STREET SUITE 10
BOCA RATON, FLORIDA 33432
561-395-8448 FAX 395-5505

OWNER: CLAY CORPORATION OF FLORIDA 33432

'THE GRAND'
LUXURY APARTMENTS
PALM BEACH GARDENS, FLORIDA

Contract	
Permit	
Bid	
Date	3/26/01
Scale	AS NOTED
Drawn	RBS
Job	99040
Sheet	P-8
Of	Sheets

© 1995 MARC VERDET A.I.A.